Data Sheet

Beretta

Exclusive Evo X

Wall-hung condensing boilers

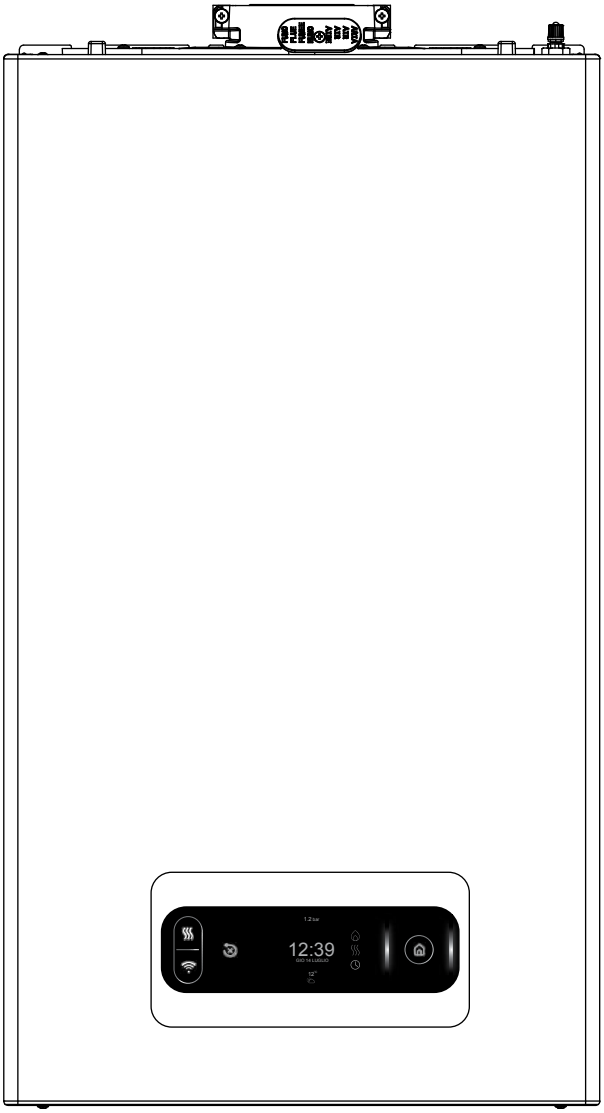

A Carrier Company

Table of contents

General introduction	4
Technical data	5
Structure and dimensions	12
Hydraulic circuit	18
WIRING DIAGRAM	20
Control panel	22
Flue gas discharge and combustion air intake	23
Accessories	31
Guide to the specifications	32

General introduction

EXCLUSIVE EVO X C

The new range of EXCLUSIVE EVO X C condensing boilers offers the user a combination of comfort and savings. Beretta offers a multi-energy boiler designed for current and future needs with a view to reducing electricity, gas and emissions consumption, with the possibility of remote control. EXCLUSIVE EVO X C, equipped with standard connectivity, reaches class A+ and is ready to be integrated into Beretta multi-energy systems.

- High efficiency increased DHW exchanger developed by Beretta.
- ACC (Active Combustion Control) new self-adaptive electronic combustion control.
- Modern and linear design with lower under-boiler fitting cover available as an accessory for excellent aesthetic integration.
- Specific DHW electronic functions: DHW delay, anti-swing functions and smart fan.
- 7 m digital modulating circulator with low consumption prevalence (EEI 0,20) as standard. 7,5 m very high head circulator available as an accessory.
- DIN standard sequence hydraulic unit.
- Low noise up to 45 dB.
- Seasonal efficiency 94%.
- Modern and intuitive touchscreen HMI, with representative icons and capacitive keys.
- 3.5" full touch display with icons and multilingual texts.
- 9 liter expansion vessel.
- Easy installation and wide choice of accessories available as options.
- IPX5D degree of protection.
- Gas transformation (Propaned Air, LPG) selectable with electronic parameter.
- Fixing crossbar and power cable supplied.
- Thermoregulation as standard, in combination with outdoor probe (available as accessory).
- Flue flange with dedicated flue gas system.

EXCLUSIVE EVO X R

The new range of EXCLUSIVE EVO X R condensing boilers offers the user a combination of comfort and savings. Beretta offers a multi-energy boiler designed for current and future needs with a view to reducing electricity, gas and emissions consumption, with the possibility of remote control.

- High efficiency increased DHW exchanger developed by Beretta.
- ACC (Active Combustion Control) new self-adaptive electronic combustion control.
- Modern and linear design with lower under-boiler fitting cover available as an accessory for excellent aesthetic integration.
- Specific DHW electronic functions: DHW delay, anti-swing functions and smart fan.
- 7 m digital modulating circulator with low consumption prevalence (EEI 0,20) as standard. 7,5 m very high head circulator available as an accessory.
- DIN standard sequence hydraulic unit.
- Low noise up to 45 dB.
- Seasonal efficiency 94%.
- Modern and intuitive touchscreen HMI, with representative icons and capacitive keys.
- 3.5" full touch display with icons and multilingual texts.
- 9 liter expansion vessel.
- Easy installation and wide choice of accessories available as options.
- IPX5D degree of protection.
- Gas transformation (Propaned Air, LPG) selectable with electronic parameter.
- Fixing crossbar and power cable supplied.
- Thermoregulation as standard, in combination with outdoor probe (available as accessory).
- Flue flange with dedicated flue gas system.

Technical data

Technical data

DESCRIPTION	U.o.M.	EXCLUSIVE EVO X 25 C			EXCLUSIVE EVO X 30 C			EXCLUSIVE EVO X 35 C		
Gas category		II2HY20M3P			II2HY20M3P			II2HY20M3P		
Destination country		IT			IT			IT		
Flue gas systems installation type		B23P; B53P; C(10); C13,C13x; C33,C33x; C43,C43x; C53,C53x; C63,C63x; C83,C83x; C93,C93x			B23P; B53P; C(10); C13,C13x; C33,C33x; C43,C43x; C53,C53x; C63,C63x; C83,C83x; C93,C93x			B23P; B53P; C(10); C13,C13x; C33,C33x; C43,C43x; C53,C53x; C63,C63x; C83,C83x; C93,C93x		
HEATING		**G20**	**G230**	**G31**	**G20**	**G230**	**G31**	**G20**	**G230**	**G31**
Nominal heat flow rate (Hi)	kW		20,00			25,00			32,00	
Nominal heat output (80-60°C)	kW		19,53			24,42			31,19	
Nominal heat output (50-30°C)	kW		21,31			26,51			33,70	
Reduced heat flow rate (Hi)	kW	1,90	3,50	2,50	2,70	4,20	3,50	2,70	4,20	3,50
Reduced thermal output (80-60°C)	kW	1,77		2,36	2,57		3,30	2,57		3,35
Reduced thermal output (50-30°C)	kW	1,96		2,63	2,84		3,65	2,84		3,69
DOMESTIC WATER										
Nominal heat flow rate (Hi)	kW		25,00			30,00		34,90	32,00	
Nominal heat output (*)	kW		25,00			30,00			34,90	
Reduced heat flow rate (Hi)	kW	1,90	3,50	2,50	2,70	4,20	3,50	2,70	4,20	3,50
Reduced heat output (*)	kW	1,90		2,50	2,70		3,50	2,70		3,50
Modulating ratio			1:13			1:11			1:13	
EFFICIENCY										
Useful efficiency at max Output (80-60°C)	%		97,7			97,7			97,5	
Useful efficiency at min Output (80-60°C)	%		92,9			95,3			95,3	
Useful efficiency max nominal Output (50-30°C)	%		106,5			106,0			105,3	
Useful efficiency min nominal Output (50-30°C)	%		103,4			105,3			105,3	
Useful efficiency 30% (return 30°C)	%		109,7			109,6			109,7	
Efficiency at medium Output Range Rated (80-60°C)(***)	%		-			-			-	
Efficiency at medium Output Range Rated 30% (30°C return)(***)	%		-			-			-	
Chimney losses with burner on (Pn max)	%		2,04			2,07			2,30	
Chimney losses with burner off	%		0,09			0,08			0,07	
Shell losses with burner on (Pn max)	%		0,26			0,23			0,20	
FLUE GAS SYSTEMS										
NOx class - UNI EN 15502			6			6			6	
Residual head concentric flue gas 0,85 m Ø60-100 mm	Pa		60			60			60	
Residual head separate flue gas 0,5 m Ø80 mm	Pa		180			195			195	
Residual head of boiler without flues at max. Output	Pa		186			199			199	
Residual head of boiler without flues at min. Output	Pa		50			50			50	
ELECTRICAL CHARACTERISTICS										
Electrical power (max electrical Power Heating-DHW)	W		79-93			80-93			104-116	
Burner electrical power at max output	W		44			44			67	
Max. circulator electric power	W		49			49			49	

General introduction

DESCRIPTION	U.o.M.	EXCLUSIVE EVO X 25 C			EXCLUSIVE EVO X 30 C			EXCLUSIVE EVO X 35 C		
Min. circulator electrical power	W	4			4			4		
Power supply	V - Hz	230-50			230-50			230-50		
Electrical protection level	IP	X5D			X5D			X5D		
HEATING OPERATION										
Maximum pressure	bar	3			3			3		
Minimum pressure for standard operation	bar	0,25÷0,45			0,25÷0,45			0,25÷0,45		
Maximum temperature:	°C	90			90			90		
H_2O heating temperature selection range.	°C	20/45 - 40/80			20/45 - 40/80			20/45 - 40/80		
Pump: max head available to the system	mbar	450			450			450		
at flow rate of	l/h	1000			1000			1000		
Membrane expansion vessel	l	9			9			9		
Preload expansion tank	bar	1			1			1		
DHW OPERATION - INSTANTANEOUS VERSION										
Maximum pressure	bar	8			8			8		
Minimum pressure	bar	0,5			0,5			0,5		
Quantity of hot water with Dt 25°C	l/min	14,3			17,2			20,0		
with Dt 30°C	l/min	11,9			14,3			16,7		
with Dt 35°C	l/min	10,2			12,3			14,3		
Minimum domestic water flow rate	l/min	2			2			2		
DHW temperature selection field	°C	37/60			37/60			37/60		
Flow Regulator	l/min	10			12			14		
AIR AND FLUES FLOW RATES										
Heating		**G20**	**G230**	**G31**	**G20**	**G230**	**G31**	**G20**	**G230**	**G31**
Air flow rate	Nm³/h	24,8	24,1	24,8	31,0	29,3	31,3	39,7	37,5	40,1
Flues flow rate	Nm³/h	26,8	26,5	26,4	33,5	32,2	33,3	42,9	41,2	42,6
Flue gas mass flow rate (max-min)	g/s	9,267-0,880	9,327-0,886	9,297-1,162	11,584-1,251	11,355-1,226	11,726-1,627	14,827-1,251	14,534-1,226	15,010-1,627
DHW		G20	G230	G31	G20	G230	G31	G20	G230	G31
Air flow rate	Nm³/h	31,0	30,2	31,0	37,2	35,2	37,6	43,3	40,9	43,7
Flues flow rate	Nm³/h	33,513	33,068	32,963	40,216	38,622	39,908	46,784	44,976	46,426
Flue gas mass flow rate (max-min)	g/s	11,584-0,880	11,658-0,886	11,621-1,162	13,900-1,251	13,625-1,226	14,072-1,627	16,171-1,251	15,851-1,226	16,370-1,627
EMISSION VALUES AT MAX - MIN FLOW WITH GAS (**)		**G20**	**G230**	**G31**	**G20**	**G230**	**G31**	**G20**	**G230**	**G31**
Maximum										
CO s.a. less than	p.p.m	230	200	250	200	230	250	240	230	240
CO_2	%	8,8	10,0	10,0	8,8	10,3	9,9	8,8	10,3	9,9
NOx s.a. less than	p.p.m	40	25	50	30	30	40	30	30	40
Flues temperature	°C	79	75	78	71	71	70	82	71	70
Minimum										
CO s.a. less than	p.p.m	15	20	20	15	25	20	15	25	20
CO_2	%	8,8	10,0	10,0	8,8	10,3	10,0	8,8	10,3	10
NOx s.a. less than	p.p.m	30	25	50	30	30	40	30	30	40
Flues temperature	°C	58	66	60	60	63	57	60	63	57

* Average value between the various operating conditions in sanitary water.
** Test performed with concentric flue Ø60-100mm, length 0,85 m - water temperature 80-60°C.
***Third party certified values for Range Rated models.
The data contained in the boxes marked in grey are to be used for electronic submission to ENEA for tax deduction purposes.

General introduction

DESCRIPTION	U.o.M.	EXCLUSIVE EVO X 25 R			EXCLUSIVE EVO X 35 R		
Gas category		II2HY20M3P			II2HY20M3P		
Destination country		IT			IT		
Flue gas systems installation type		B23P; B53P; C(10); C13,C13x; C33,C33x; C43,C43x; C53,C53x; C63,C63x; C83,C83x; C93,C93x			B23P; B53P; C(10); C13,C13x; C33,C33x; C43,C43x; C53,C53x; C63,C63x; C83,C83x; C93,C93x		
HEATING		**G20**	**G230**	**G31**	**G20**	**G230**	**G31**
Nominal heat flow rate (Hi)	kW		20,00			32,00	
Nominal heat output (80-60°C)	kW		19,53			31,19	
Nominal heat output (50-30°C)	kW		21,31			33,70	
Reduced heat flow rate (Hi)	kW	1,90	3,50	2,50	2,70	4,20	3,50
Reduced thermal output (80-60°C)	kW	1,77		2,36	2,57		3,35
Reduced thermal output (50-30°C)	kW	1,96		2,63	2,84		3,69
DOMESTIC WATER							
Nominal heat flow rate (Hi)	kW		25,00		34,90	32,00	
Nominal heat output (*)	kW		25,00			34,90	
Reduced heat flow rate (Hi)	kW	1,90	3,50	2,50	2,70	4,20	3,50
Reduced heat output (*)	kW	1,90		2,50	2,70		3,50
Modulating ratio			1:13			1:13	
EFFICIENCY							
Useful efficiency at max Output (80-60°C)	%		97,7			97,5	
Useful efficiency at min Output (80-60°C)	%		92,9			95,3	
Useful efficiency max nominal Output (50-30°C)	%		106,5			105,3	
Useful efficiency min nominal Output (50-30°C)	%		103,4			105,3	
Useful efficiency 30% (return 30°C)	%		109,7			109,7	
Efficiency at medium Output Range Rated (80-60°C)(***)	%		-			-	
Efficiency at medium Output Range Rated 30% (30°C return)(***)	%		-			-	
Chimney losses with burner on (Pn max)	%		2,04			2,30	
Chimney losses with burner off	%		0,09			0,07	
Shell losses with burner on (Pn max)	%		0,26			0,20	
FLUE GAS SYSTEMS							
NOx class - UNI EN 15502			6			6	
Residual head concentric flue gas 0,85 m Ø60-100 mm	Pa		60			60	
Residual head separate flue gas 0,5 m Ø80 mm	Pa		180			195	
Residual head of boiler without flues at max. Output	Pa		186			199	
Residual head of boiler without flues at min. Output	Pa		50			50	
ELECTRICAL CHARACTERISTICS							
Electrical power (max electrical Power Heating-DHW)	W		79-93			104-116	
Burner electrical power at max output	W		44			67	
Max. circulator electric power	W		49			49	
Min. circulator electrical power	W		4			4	
Power supply	V - Hz		230-50			230-50	
Electrical protection level	IP		X5D			X5D	
HEATING OPERATION							
Maximum pressure	bar		3			3	
Minimum pressure for standard operation	bar		0,25÷0,45			0,25÷0,45	
Maximum temperature:	°C		90			90	
H_2O heating temperature selection range.	°C		20/45 - 40/80			20/45 - 40/80	
Pump: max head available to the system	mbar		450			450	
at flow rate of	l/h		1000			1000	
Membrane expansion vessel	l		9			9	

General introduction

DESCRIPTION	U.o.M.	EXCLUSIVE EVO X 25 R			EXCLUSIVE EVO X 35 R		
Preload expansion tank	bar	1			1		
AIR AND FLUES FLOW RATES							
Heating		**G20**	**G230**	**G31**	**G20**	**G230**	**G31**
Air flow rate	Nm³/h	24,8	24,1	24,8	39,7	37,5	40,1
Flues flow rate	Nm³/h	26,8	26,5	26,4	42,9	41,2	42,6
Flue gas mass flow rate (max-min)	g/s	9,267-0,880	9,327-0,886	9,297-1,162	14,827-1,251	14,534-1,226	15,010-1,627
DHW		**G20**	**G230**	**G31**	**G20**	**G230**	**G31**
Air flow rate	Nm³/h	31,0	30,2	31,0	43,3	40,9	43,7
Flues flow rate	Nm³/h	33,513	33,068	32,963	46,784	44,976	46,426
Flue gas mass flow rate (max-min)	g/s	11,584-0,880	11,658-0,886	11,621-1,162	16,171-1,251	15,851-1,226	16,370-1,627
EMISSION VALUES AT MAX - MIN FLOW WITH GAS (**)		**G20**	**G230**	**G31**	**G20**	**G230**	**G31**
Maximum							
CO s.a. less than	p.p.m	230	200	250	240	230	240
CO_2	%	8,8	10,0	10,0	8,8	10,3	9,9
NOx s.a. less than	p.p.m	40	25	50	30	30	40
Flues temperature	°C	79	75	78	82	71	70
Minimum							
CO s.a. less than	p.p.m	15	20	20	15	25	20
CO_2	%	8,8	10,0	10,0	8,8	10,3	10,0
NOx s.a. less than	p.p.m	30	25	50	30	30	40
Flues temperature	°C	58	66	60	60	63	57

* Average value between the various operating conditions in DHW
** Test performed with concentric flue gas Ø60-100mm, length 0,85m - water temperature 80-60°C
*** Values certified by a third party for Range Rated models
The data contained in the boxes marked in grey are to be used for electronic submission to ENEA for tax deduction purposes.

General introduction

ErP regulations technical data table

Parameter	Symbol	Unit	EXCLUSIVE EVO X		
			25 C	30 C	35 C
Seasonal efficiency class in central heating mode	-	-	A	A	A
Seasonal efficiency class in water heating	-	-	A	A	A
Useful (rated) heat output	Pn	kW	20	24	31
Seasonal efficiency class in room heating mode	ηs	%	94	94	94
Useful heat output Pn					
At useful heat output and at high temperature capacity (*)	P4	kW	19,5	24,4	31,2
At 30% of useful heat output and at low temperature capacity P1 (HHV)	P1	kW	6,6	8,2	10,5
EFFICIENCY					
At useful heat output and at high temperature capacity (*)	η4	%	87,9	87,9	87,8
At 30% of useful heat output and at low temperature capacity P1 (HHV)	η1	%	98,8	98,7	98,8
Auxiliary electrical consumption					
At full load	elmax	W	30,0	31,1	54,9
At partial load	elmin	W	12,2	13,3	13,6
In standby mode	PSB	W	3,0	3,0	3,0
Other parameters					
Thermal losses in standby mode	Pstby	W	30,0	35,0	35,0
Pilot flame energy consumption	Pign	W	-	-	-
Yearly energy consumption	QHE	GJ	60	75	96
Noise level, indoor (sound power)	LWA	dB	47	45	48
Nitrogen oxide emissions (NOx)	NOx	mg/kWh	22	20	31
Domestic hot water					
Declared load profile			XL	XL	XXL
Energy efficiency class in water heating	ηwh	%	85	86	87
Daily electrical energy consumption	Qelec	kWh	0,142	0,089	0,130
Daily fuel consumption	Qfuel	kWh	22,88	22,73	27,95
Annual electrical energy consumption	AEC	kWh	31	19	28
Annual fuel consumption	AFC	GJ	17	17	22

* High temperature regime: 60°C return and 80°C flow of the boiler

** Low temperature regime: for condensing boilers 30°C, for low temperature boilers 37°C, for other heating appliances 50°C return temperature

The data contained in the boxes marked in grey are to be used for electronic submission to ENEA for tax deduction purposes.

General introduction

Parameter	Symbol	Unit	EXCLUSIVE EVO X	
			25 R	35 R
Seasonal efficiency class in central heating mode	-	-	A	A
Seasonal efficiency class in water heating	-	-	-	-
Useful (rated) heat output	Pn	kW	20	31
Seasonal efficiency class in room heating mode	ηs	%	94	94
Useful heat output Pn				
At useful heat output and at high temperature capacity (*)	P4	kW	19,5	31,2
At 30% of useful heat output and at low temperature capacity P1 (HHV)	P1	kW	6,6	10,5
EFFICIENCY				
At useful heat output and at high temperature capacity (*)	η4	%	87,9	87,8
At 30% of useful heat output and at low temperature capacity P1 (HHV)	η1	%	98,8	98,8
Auxiliary electrical consumption				
At full load	elmax	W	30,0	54,9
At partial load	elmin	W	12,2	13,6
In standby mode	PSB	W	3,0	3,0
Other parameters				
Thermal losses in standby mode	Pstby	W	30,0	35,0
Pilot flame energy consumption	Pign	W	-	-
Yearly energy consumption	QHE	GJ	60	96
Noise level, indoor (sound power)	LWA	dB	47	48
Nitrogen oxide emissions (NOx)	NOx	mg/kWh	22	31
Domestic hot water				
Declared load profile			-	-
Energy efficiency class in water heating	ηwh	%	-	-
Daily electrical energy consumption	Qelec	kWh	-	-
Daily fuel consumption	Qfuel	kWh	-	-
Annual electrical energy consumption	AEC	kWh	-	-
Annual fuel consumption	AFC	GJ	-	-

* High temperature regime: 60°C on the return and 80°C on the boiler flow
** Low temperature regime: for condensing boilers 30°C, for low temperature boilers 37°C, for other heating appliances 50°C return temperature
The data contained in the boxes marked in grey are to be used for electronic submission to ENEA for tax deduction purposes (for Italy).

General introduction

Residual head of the circulator

The boiler is equipped with a high efficiency circulator already connected hydraulically and electrically, whose available useful performances are indicated in the graph.

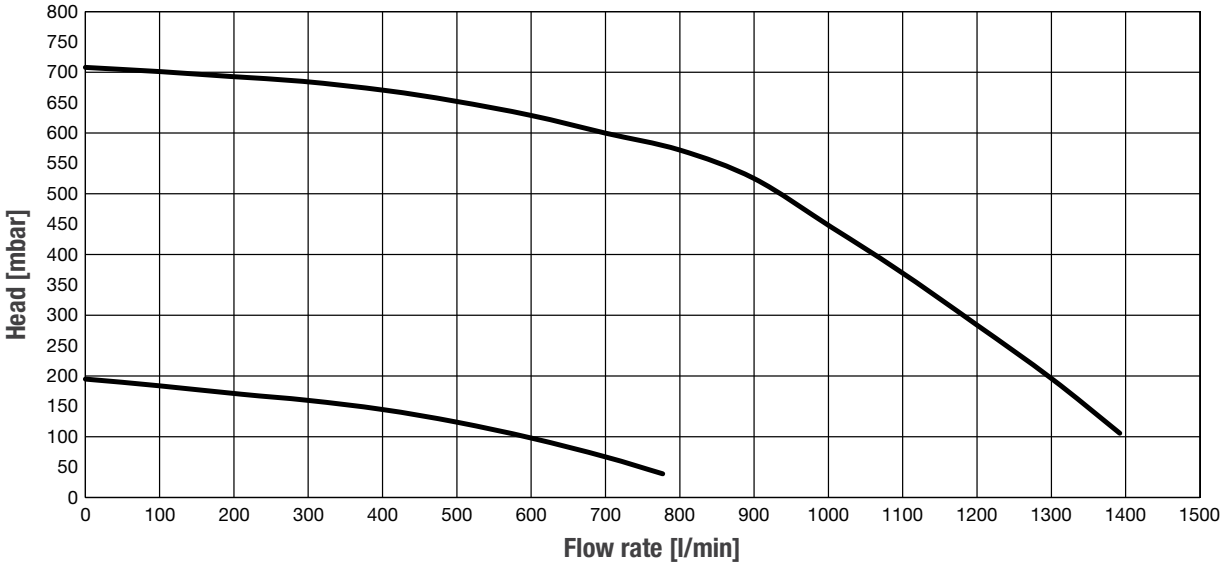

Water characteristics

In case of new installation or replacement of the boiler it is necessary to carry out a preventive cleaning of the heating system.
In order to guarantee the correct functioning of the product, after each cleaning operation, addition of additives and/or chemical treatments (for example antifreeze liquids, filming agents, etc.), check that the parameters in the table are within the indicated values.

mode	U.M.	Heating circuit water	Water filling
PH value		7-8	-
Hardness	°F	-	<15
appearance		-	clear
Fe	mg/kg	<0,5	-
Cu	mg/kg	<0,1	-

Structure and dimensions

Overall dimensions

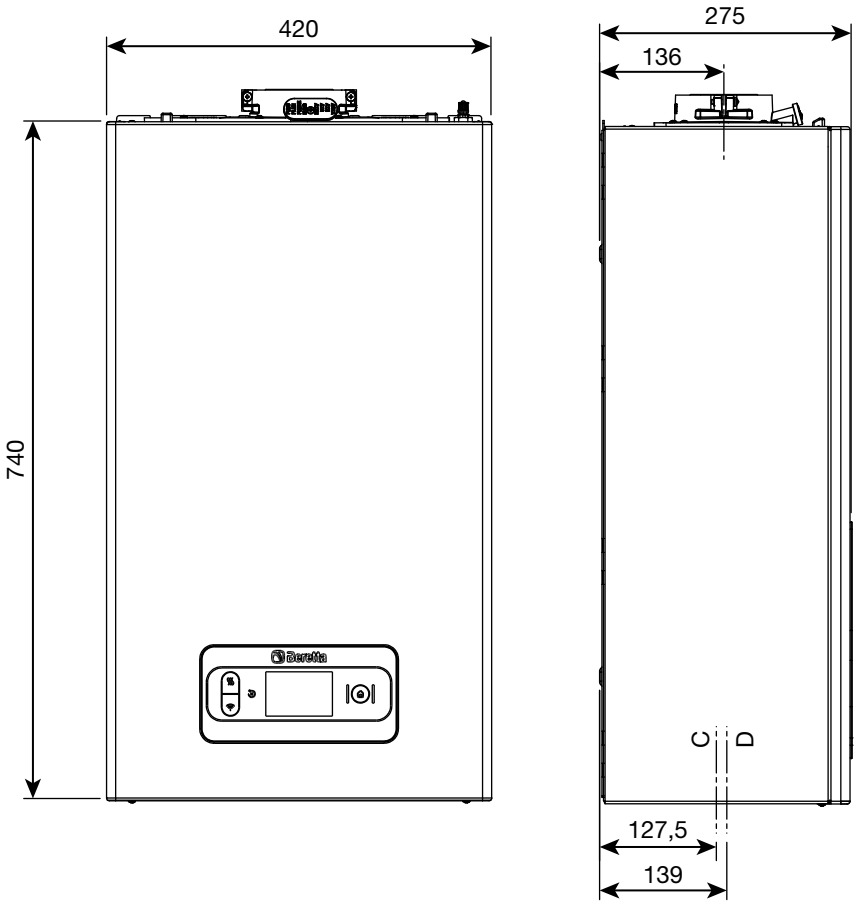

	Weight
25 C	29 kg
30 C	30 kg
35 C	30 kg
25 R	28 kg
35 R	29 kg

C	Water
D	GAS

Structure and dimensions

Anti-freeze system

The boiler is equipped as standard with an automatic antifreeze system, which activates when the primary circuit water temperature drops below 5°C. This system is always active and guarantees protection of the boiler up to an air temperature in the installation site of >0°C.

NOTE - For further information, please refer to the installation manual.

Place of installation

The boiler can be installed indoors (fig. A) or outdoors in a partially protected place (fig. B), i.e. in a place where it is not exposed to direct action and infiltration of rain, snow or hail. The temperature range in which it can operate is: from >0°C to +60°C.
The model C boiler can also be installed outside in the dedicated built-in unit (fig. C - for dedicated instructions refer to the specific kit).

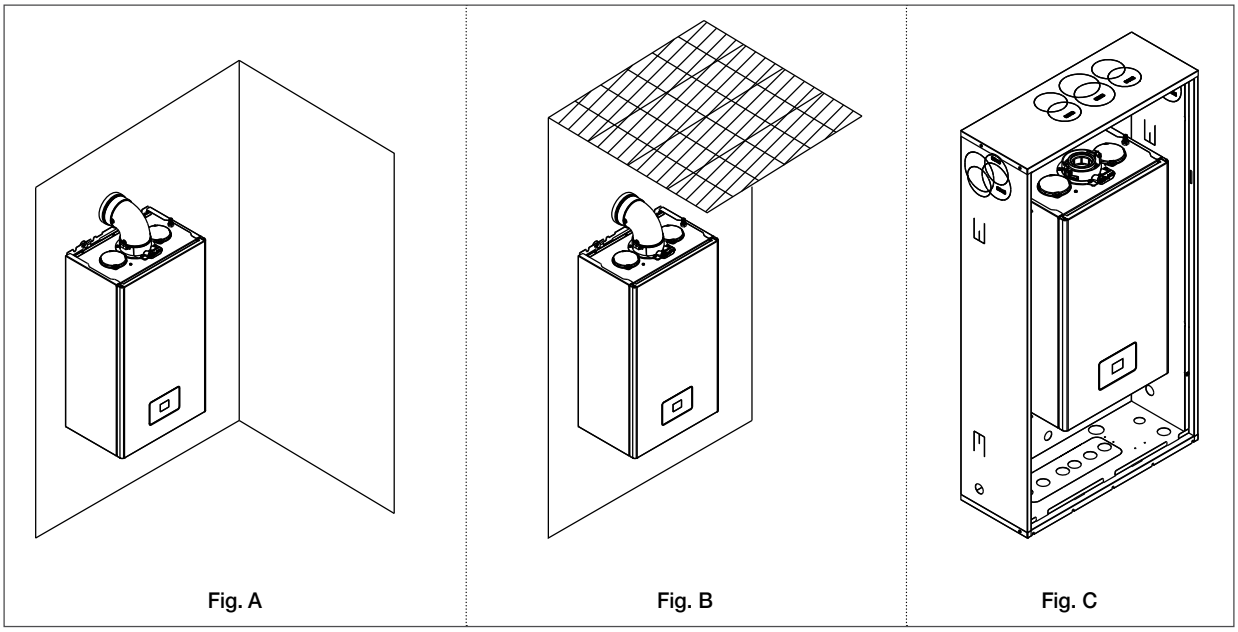

Fig. A Fig. B Fig. C

Structure and dimensions

Minimum distances

Access the inside of the boiler for normal maintenance operations, respecting the minimum spaces required for installation.
Position the appliance, keeping in mind that:

- It must be installed on a wall suitable to support its weight
- It should not be placed on top of a range or other cooking appliance.
- It is forbidden to leave flammable substances in the room where the boiler is installed.

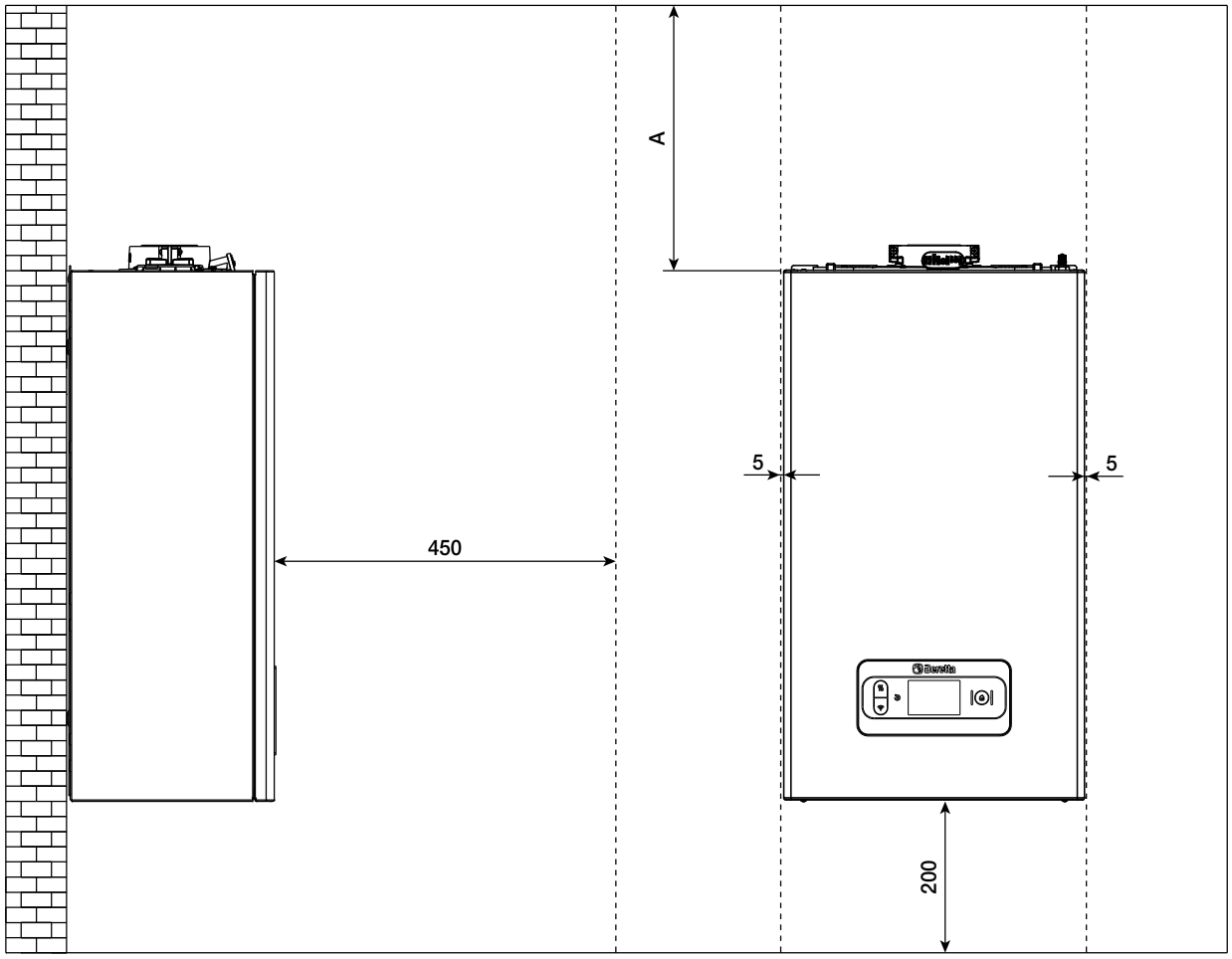

Minimum distances for cabinet installation

Respect a safety distance between the wall on which the boiler is installed and the hot parts outside it.

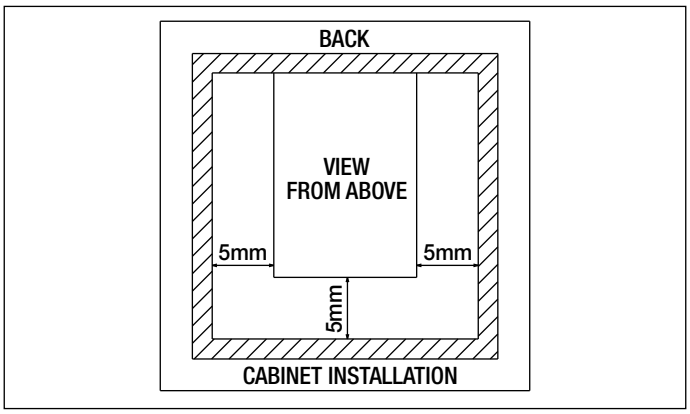

Structure and dimensions

SYSTEM LAYOUT

Models C

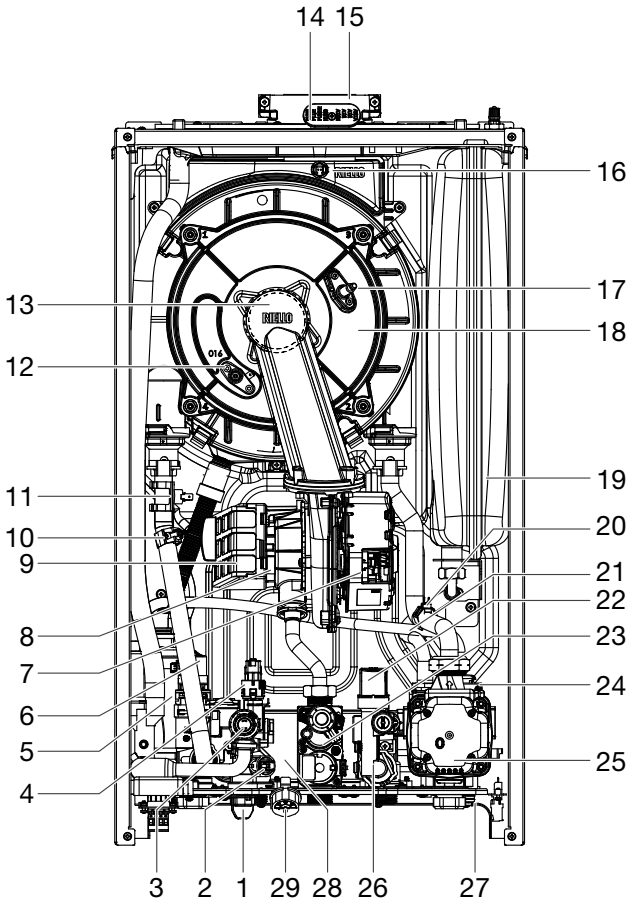

1. Filling tap
2. DHW NTC probe
3. Safety valve
4. Pressure transducer
5. Siphon
6. Three-way valve
7. Fan
8. Mixer
9. Air filter
10. NTC flow probe
11. Limit thermostat
12. Flame detection electrode/ ionization sensor
13. Burner
14. Combustion analysis socket cap
15. Flue gas discharge
16. Flue gas probe
17. Flame ignition electrode
18. Heat exchanger
19. Expansion vessel
20. NTC return probe
21. Degasser tube
22. Filling solenoid valve
23. Gas valve
24. Air vent valve
25. Pump
26. Flow meter
27. System drain cock
28. DHW exchanger
29. Hydrometer

Structure and dimensions

Models R

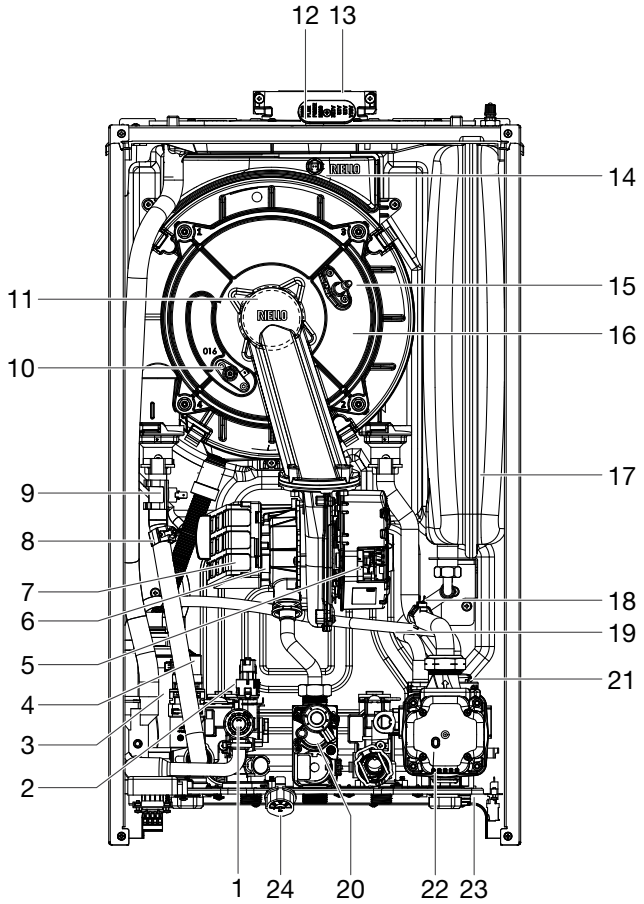

1. Safety valve
2. Pressure transducer
3. Siphon
4. Three-way valve
5. Fan
6. Mixer
7. Air filter
8. NTC flow probe
9. Limit thermostat
10. Flame detection electrode/ ionization sensor
11. Burner
12. Combustion analysis socket cap
13. Flue gas discharge
14. Flue gas probe
15. Flame ignition electrode
16. Heat exchanger
17. Expansion vessel
18. NTC return probe
19. Degasser tube
20. Gas valve
21. Air vent valve
22. Pump
23. System drain cock
24. Hydrometer

Structure and dimensions

Installation template and hydraulic connections

Models C

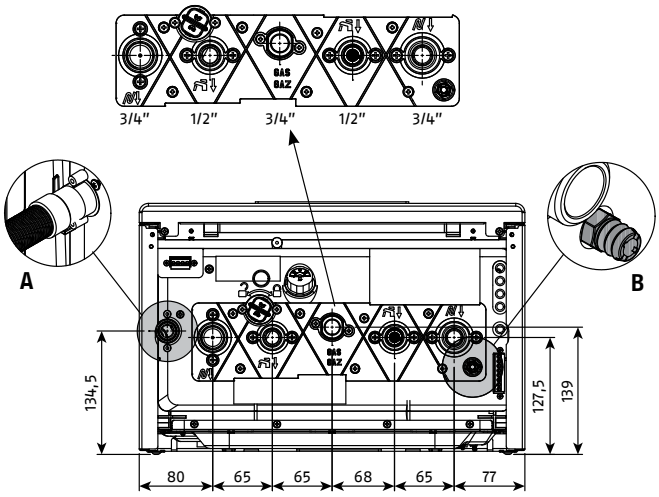

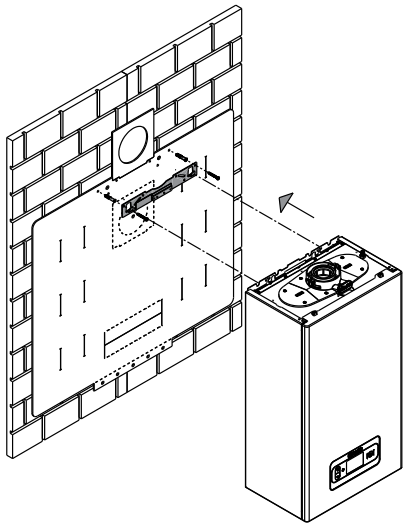

A. Siphon drain and safety valve

B. System drain cock

mode	Gasket	Torque wrench
Tightening torque	Ø3/4"	35Nm
	Ø1/2"	25Nm

Models R

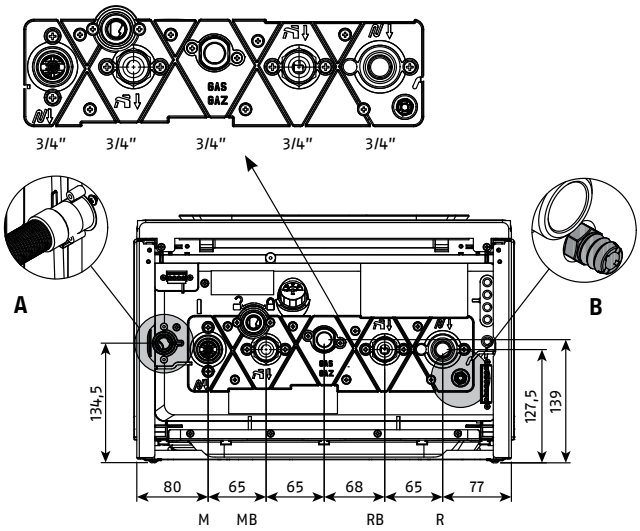

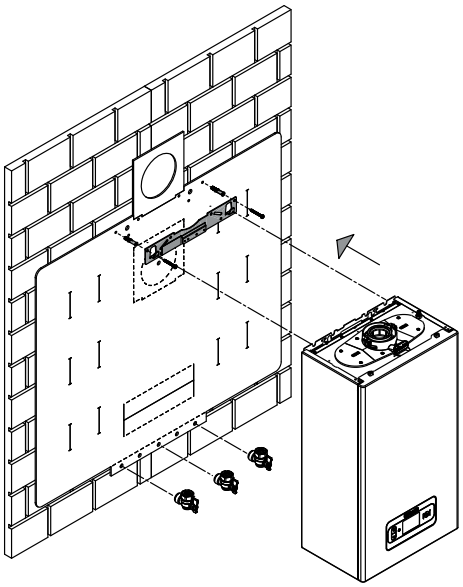

A. Siphon drain and safety valve

B. System drain cock

Mode	Gasket	Torque wrench
Tightening torque	Ø 3/4"	35Nm
	Ø 1/2"	25Nm

ATTENTION - If no cylinder is connected, it is MANDATORY to connect the boiler flow and return together using a suitable fitting/pipe.

Hydraulic circuit

Models C

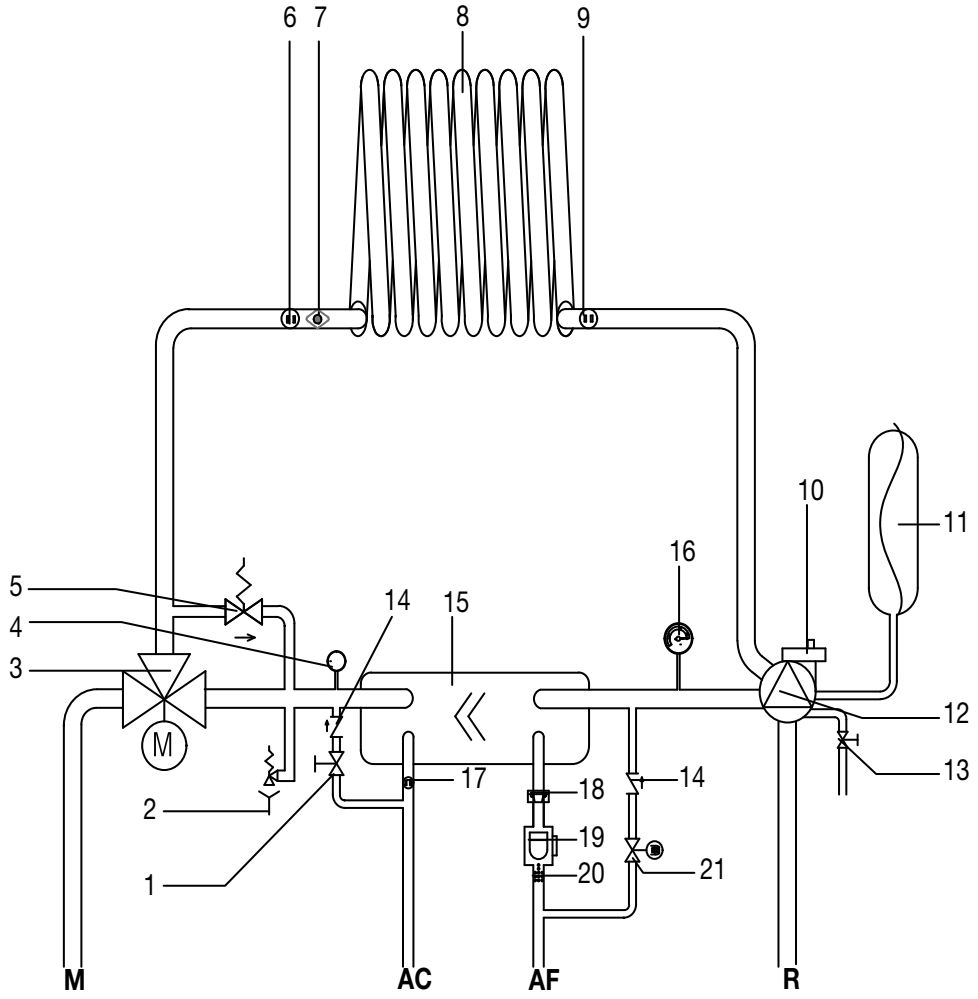

1. Filling tap
2. Safety valve
3. Hydraulic three-way valve
4. Pressure transducer
5. Automatic by-pass
6. Flow probe
7. Limit thermostat
8. Primary exchanger
9. Return probe
10. Lower air vent valve
11. Expansion vessel
12. Pump
13. System drain cock
14. Non-return valve
15. DHW exchanger
16. Hydrometer
17. DHW probe
18. Flow limiter
19. Flow meter
20. DHW filter
21. Filling solenoid valve

AC. Hot water
AF. Cold water
M. Heating flow
R. Heating return

Hydraulic circuit

Models R

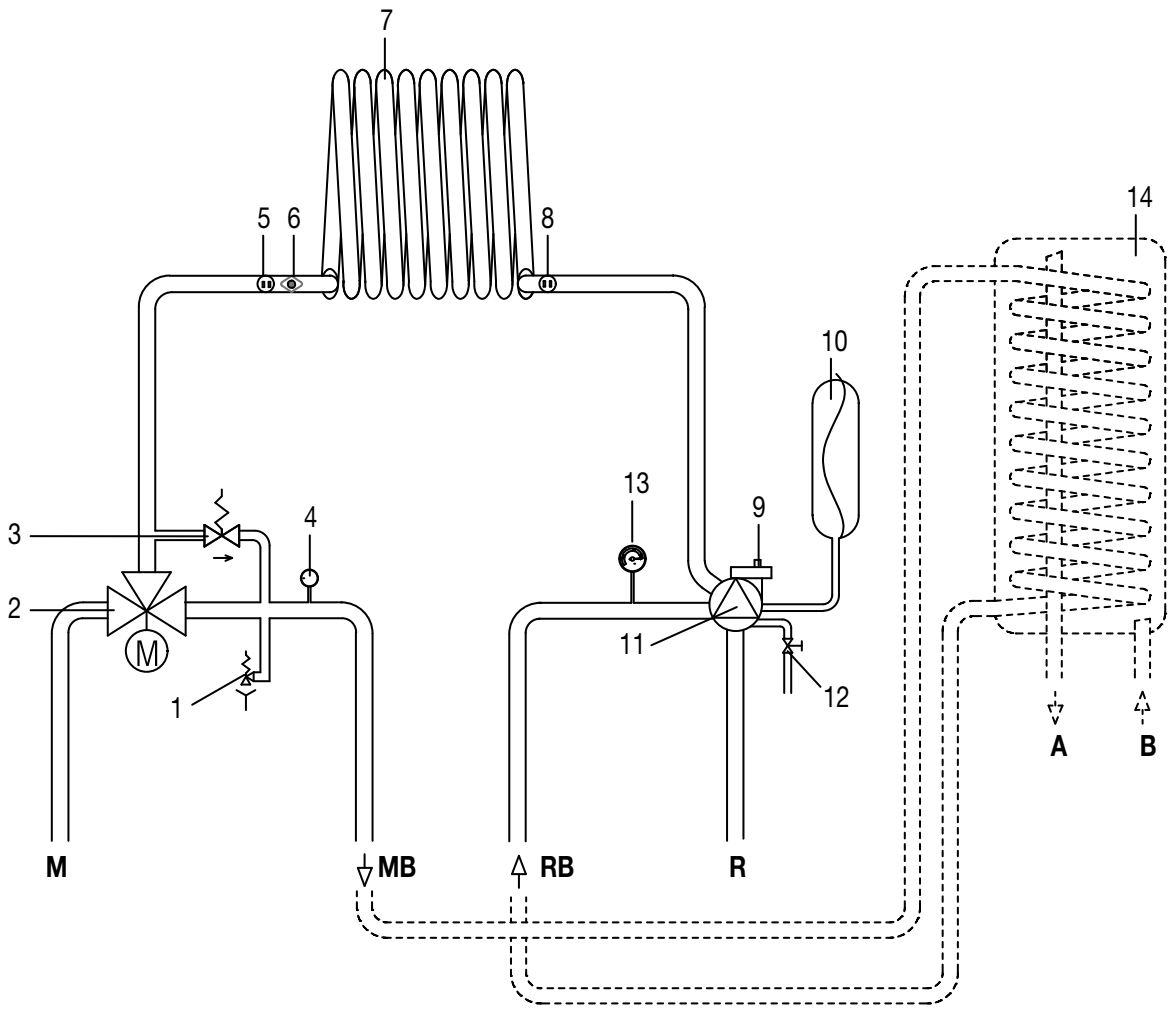

1. Safety valve
2. Hydraulic three-way valve
3. Automatic by-pass
4. Pressure transducer
5. Flow probe
6. Limit thermostat
7. Primary exchanger
8. Return probe
9. Lower air vent valve
10. Expansion vessel
11. Pump
12. System drain cock
13. Hydrometer
14. Cylinder (accessory available on request)

M. Heating flow
R. Heating return
MB. External cylinder flow
RB. External cylinder return
A. Hot water outlet
B. Cold water inlet

WIRING DIAGRAM

Models C

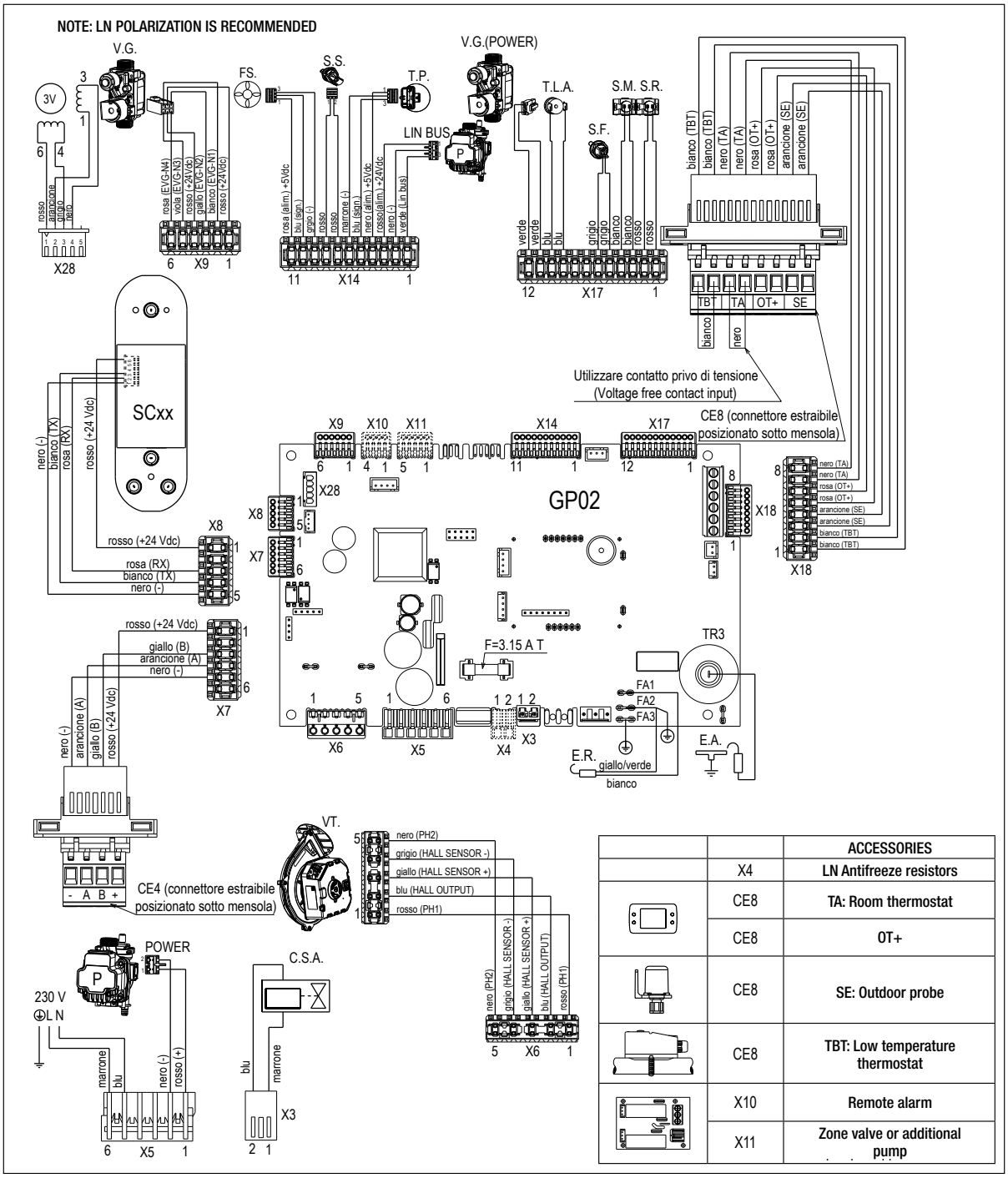

		ACCESSORIES
	X4	LN Antifreeze resistors
	CE8	TA: Room thermostat
	CE8	OT+
	CE8	SE: Outdoor probe
	CE8	TBT: Low temperature thermostat
	X10	Remote alarm
	X11	Zone valve or additional pump

WIRING DIAGRAM

Models R

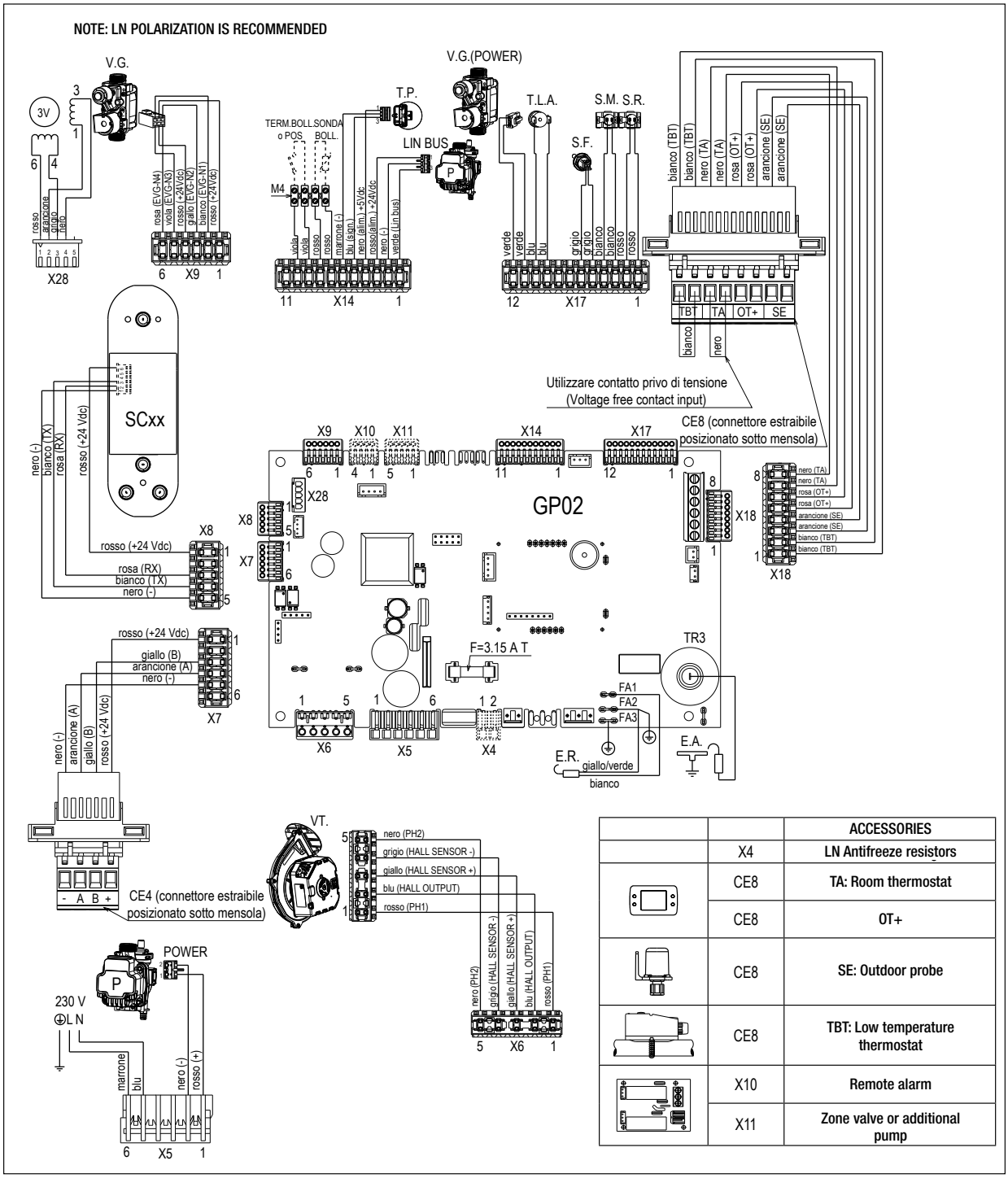

		ACCESSORIES
	X4	LN Antifreeze resistors
	CE8	TA: Room thermostat
	CE8	OT+
	CE8	SE: Outdoor probe
	CE8	TBT: Low temperature thermostat
	X10	Remote alarm
	X11	Zone valve or additional pump

Control panel

The EXCLUSIVE EVO X touch screen display allows the user to interact quickly and easily with the interface which, depending on the level of use, presents graphic symbols or descriptive texts.
When the display is at rest, the stand-by screen is displayed, simply press in the central part of the display to activate the operating mode.
The button allows you to reset an anomaly in progress.
The button instead it allows a quick transition from summer mode to winter mode and vice versa.
The EXCLUSIVE EVO X touch screen features colors that further aid the SMART use of our interface:

grey	white	green	red	orange
Typically the color "grey" is associated with a parameter or function that cannot be modified.	Typically the color "white" is associated with a parameter or function that can be modified.	Indicates regular operation of the appliance.	Associated with the symbol ⚠ indicates the presence of an anomaly that blocks boiler operation.	Indicates the presence of a transient anomaly.

Flue gas discharge and combustion air intake

For the evacuation of burnt products, refer to the UNI7129-7131 standard. Furthermore, you must always comply with the local regulations of the Fire Brigade, the Gas Company and any municipal provisions.
It is essential for the extraction of fumes and the supply of combustion air to the boiler that only original pipes are used except type C6 (provided they are certified) and that the connection is carried out correctly as indicated in the instructions supplied with the flue accessories. Multiple appliances can be connected to a single flue provided that they are all of the condensing type.

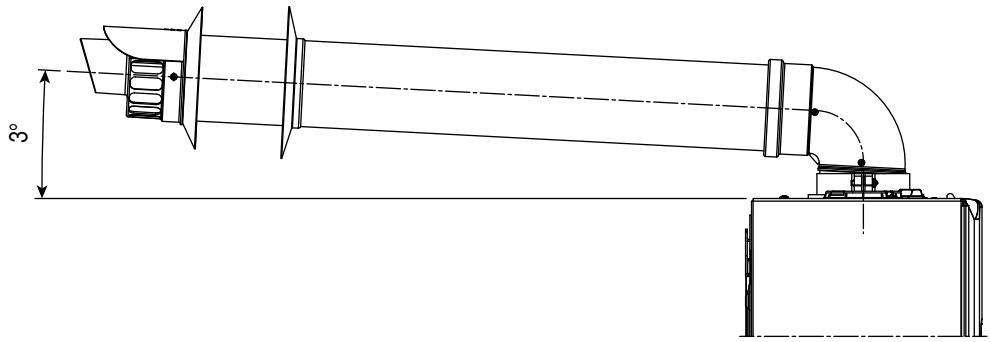

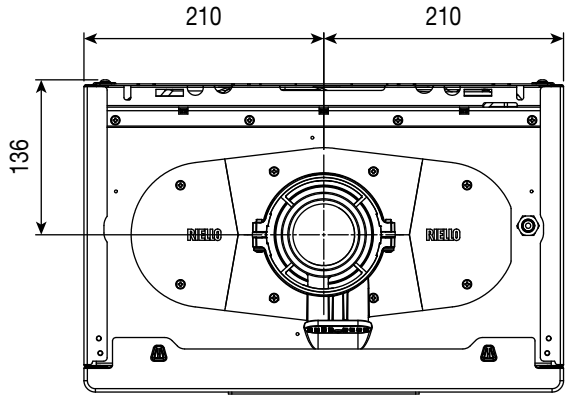

Flue gas discharge and combustion air intake

Flue gas discharge configuration

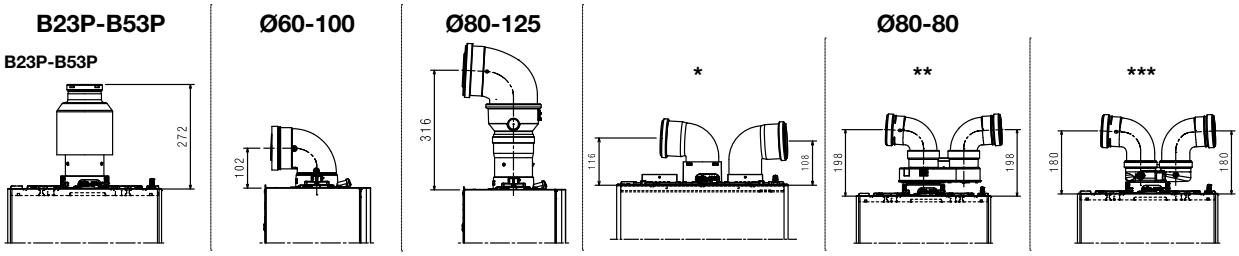

* Twin flue gas
** twin flue gas from Ø60-100 to Ø80-80
*** compact twin flue gas from Ø60-100 to Ø80-80

Maximum flue gas length Ø80mm

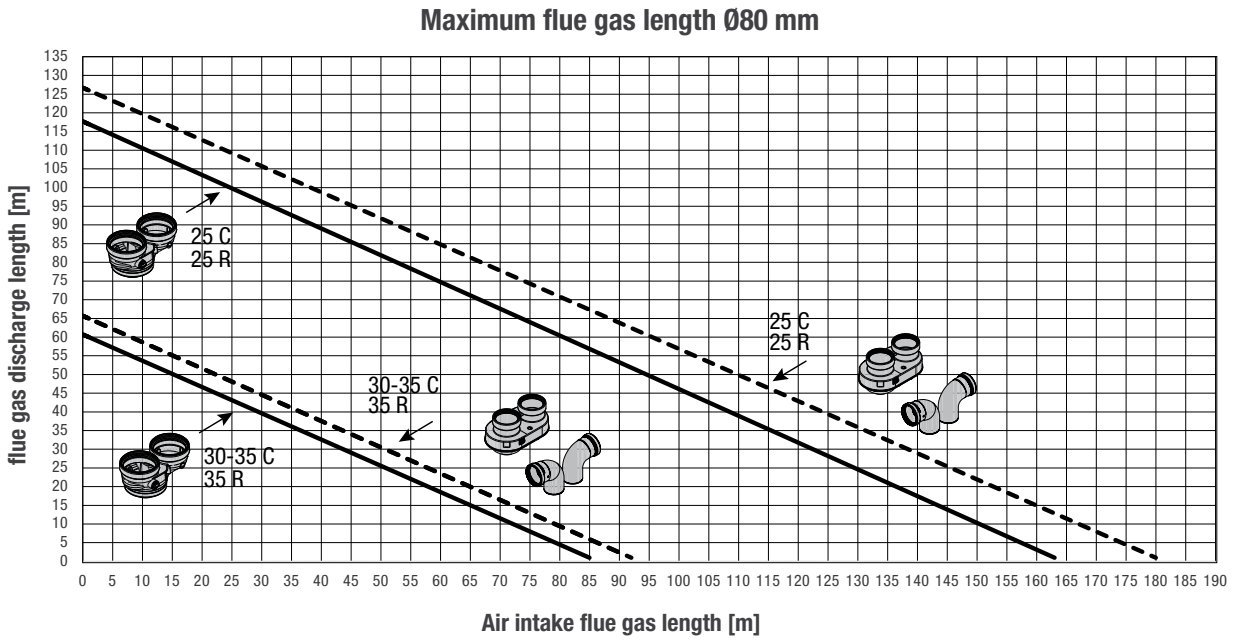

IMAGE	DESCRIPTION
	twin flue gas from Ø60-100 to Ø80-80
	Twin flue gas with use of the Ø80 Twin flue gas connection kit (accessory)
	compact twin flue gas from Ø60-100 to Ø80-80

Flue gas discharge and combustion air intake

Flue gas discharge configuration table

For discharge lengths, refer to what is indicated below.

Models C

Type of flue gas		Diameter (Ø - mm)	25 C		30 C		35 C		Pressure drop (m)		Wall crossing hole (Ø - mm)
			Maximum length (m)	Maximum length (m)	Maximum length (m)	Maximum length (m)	Maximum length (m)	Maximum length (m)	45° bend	90° bend	
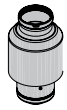	vertical connection from Ø60-100 a Ø80	80	120	0,50	60	0,50	60	0,50	1	1,5	-
	90° bend Ø60-100	60-100	horizontal 10 vertical 11	horizontal 0,85 vertical 2	horizontal 8 vertical 9	horizontal 0,85 vertical 2	horizontal 8 vertical 9	horizontal 0,85 vertical 2	1,3	1,6	105
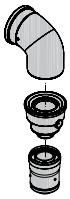	90° bend Ø80-125 adapter from Ø60-100 to Ø80-125 vertical attachment adapter Ø60-100	80-125	25	0,85	20	0,85	20	0,85	1	1,5	130
	twin flue gas from Ø60-100 to Ø80-80	80-80	75+75	0,50	39+39	0,50	39+39	0,50	1	1,5	-
	Twin flue gas with use of the Ø80 Twin flue gas connection kit (accessory)	80-80									
	compact twin flue pipe from Ø60-100 to Ø80-80		69+69	0,50	36+36	0,50	36+36	0,50	1	1,5	-

Flue gas discharge and combustion air intake

Models R

Type of flue gas		Diameter (Ø - mm)	25 R		35 R		Pressure drop (m)		Wall crossing hole (Ø - mm)
			Maximum length (m)	Maximum length (m)	Maximum length (m)	Maximum length (m)	45° bend	90° bend	
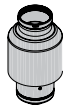	vertical connection from Ø60-100 a Ø80	80	120	0,50	60	0,50	1	1,5	-
	90° bend Ø60-100	60-100	horizontal 10	horizontal 0,85	horizontal 8	horizontal 0,85	1,3	1,6	105
			vertical 11	vertical 2	vertical 9	vertical 2			
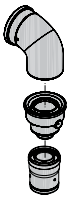	90° bend Ø80-125 adapter from Ø60-100 to Ø80-125 vertical attachment adapter Ø60-100	80-125	25	0,85	20	0,85	1	1,5	130
	twin flue gas from Ø60-100 to Ø80-80	80-80	75+75	0,50	39+39	0,50	1	1,5	-
	Twin flue gas with use of the Ø80 Twin flue gas connection kit (accessory)	80-80							
	compact twin flue pipe from Ø60-100 to Ø80-80		69+69	0,50	36+36	0,50	1	1,5	-

Flue gas discharge and combustion air intake

Twin flue gas Ø80 with ducting Ø50 - Ø60 - Ø80

The boiler features allow the connection of the Ø80 flue gas to the Ø50 - Ø60 - Ø80 inside-chimney ranges.
The table shows the basic configurations of the ducts allowed.

Air intake	1 90° bend Ø80
	4,5m tube Ø80
FLUE GAS SYSTEMS	1 90° bend Ø80
	4,5m tube Ø80
	Reduction from Ø80 to Ø50 from Ø80 to Ø60
	Basic chimney bend 90°, Ø50 or Ø60 or Ø80
	For inside-chimney lengths see table

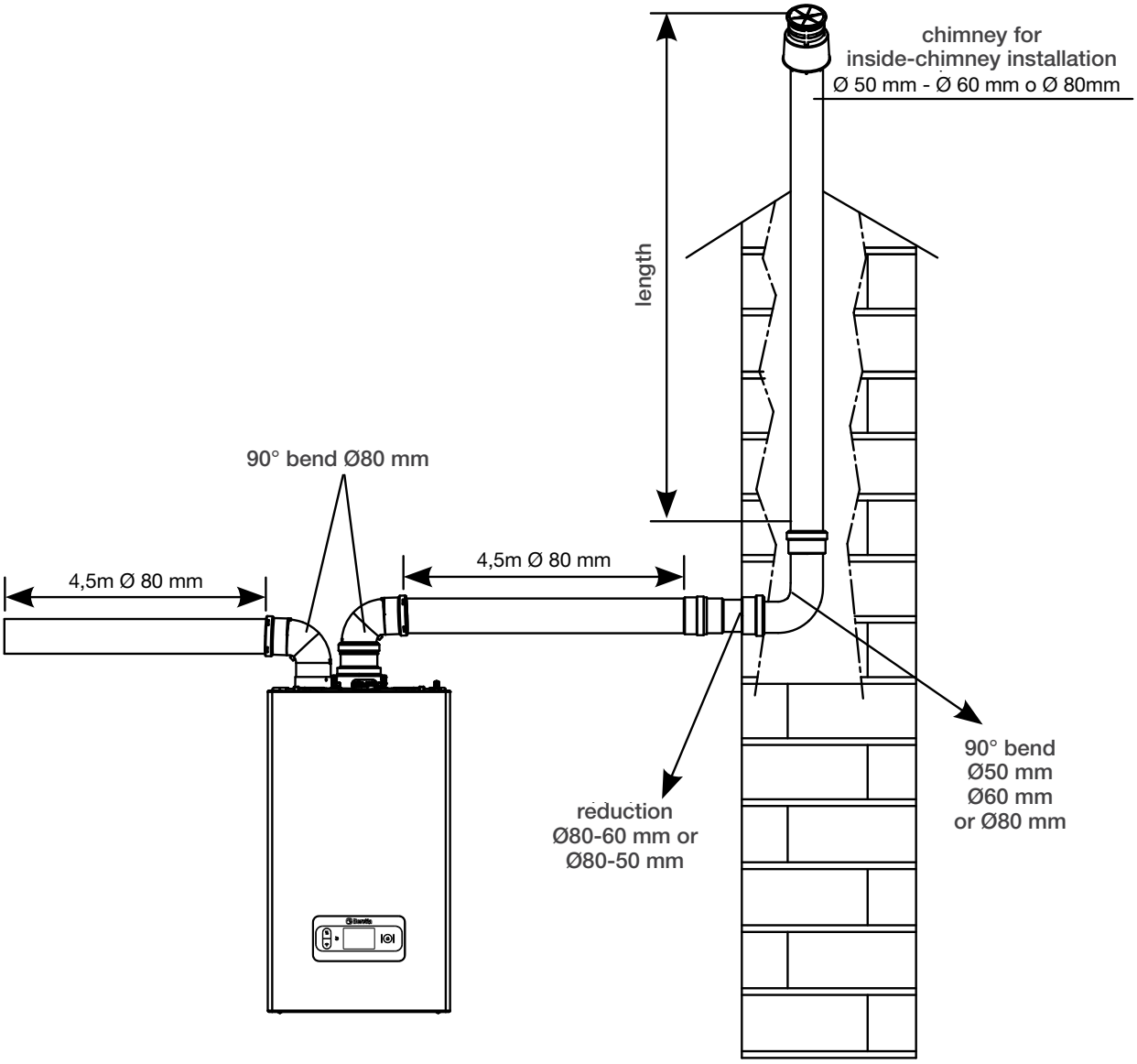

Flue gas discharge and combustion air intake

Inside-chimney flues adjustment tables

Splitter						
Description	Fan revolutions rpm		Flue gas Ø50	Flue gas Ø60	Flue gas Ø80	ΔP boiler outlet (Pa)
	Heating	DHW		max length m		
25 C	6.300	7.900	7	23	116	180
	6.400	8.000	9*	29*	144*	210*
	6.500	8.100	11*	34*	172*	257*
	6.600	8.200	14*	40*	201*	285*
	6.700	8.300	16*	46*	229*	330*
	6.800	8.400	18*	51*	257*	355*
	6.900	8.500	21*	57*	285*	385*
	7.000	8.600	23*	63*	314*	425*
	7.100	8.700	25*	68*	342*	465*
	7.200	8.800	28*	74*	370*	497*
30 C	6.200	7.400	2	12	62	195
	6.300	7.500	4*	18*	92*	242*
	6.400	7.600	6*	24*	119*	289*
	6.500	7.700	9*	29*	145*	337*
	6.600	7.800	11*	34*	172*	384*
35 C	7.400	8.600	2	12	62	195
	7.500	8.700	4*	18*	92*	242*
	7.600	8.800	6*	24*	119*	289*
	7.700	8.900	9*	29*	145*	337*
	7.800	9.000	11*	34*	172*	384*

(*) Maximum installable length ONLY with class H1 flue gas discharge.

compact twin flue gas						
Description	Fan revolutions rpm		Flue gas Ø50	Flue gas Ø60	Flue gas Ø80	ΔP boiler outlet (Pa)
	Heating	DHW		max length m		
25 C	6.300	7.900	6	20	98	170
	6.400	8.000	8*	25*	124*	203*
	6.500	8.100	10*	30*	150*	235*
	6.600	8.200	13*	35*	176*	268*
	6.700	8.300	15*	40*	202*	300*
	6.800	8.400	17*	46*	228*	333*
	6.900	8.500	19*	51*	253*	365*
	7.000	8.600	21*	56*	279*	398*
	7.100	8.700	23*	61*	305*	430*
	7.200	8.800	25*	66*	331*	463*
30 C	6.200	7.400	1	11	57	180
	6.300	7.500	3*	17*	84*	227*
	6.400	7.600	6*	22*	111*	274*
	6.500	7.700	8*	28*	138*	322*
	6.600	7.800	10*	33*	165*	369*
35 C	7.400	8.600	1	11	57	180
	7.500	8.700	3*	17*	84*	227*
	7.600	8.800	6*	22*	111*	274*
	7.700	8.900	8*	28*	138*	322*
	7.800	9.000	10*	33*	165*	369*

(*) Maximum installable length ONLY with class H1 flue gas discharge.

Flue gas discharge and combustion air intake

Splitter						
Description	Fan revolutions rpm		Flue gas Ø50	Flue gas Ø60	Flue gas Ø80	ΔP boiler outlet (Pa)
	Heating	DHW	max length m			
25 R	6.300	7.900	7	23	116	180
	6.400	8.000	9*	29*	144*	210*
	6.500	8.100	11*	34*	172*	257*
	6.600	8.200	14*	40*	201*	285*
	6.700	8.300	16*	46*	229*	330*
	6.800	8.400	18*	51*	257*	355*
	6.900	8.500	21*	57*	285*	385*
	7.000	8.600	23*	63*	314*	425*
	7.100	8.700	25*	68*	342*	465*
	7.200	8.800	28*	74*	370*	497*
35 R	7.400	8.600	2	12	62	195
	7.500	8.700	4*	18*	92*	242*
	7.600	8.800	6*	24*	119*	289*
	7.700	8.900	9*	29*	145*	337*
	7.800	9.000	11*	34*	172*	384*

(*) Maximum installable length ONLY with class H1 flue gas discharge.

compact twin flue gas						
Description	Fan revolutions rpm		Flue gas Ø50	Flue gas Ø60	Flue gas Ø80	ΔP boiler outlet (Pa)
	Heating	DHW	max length m			
25 R	6.300	7.900	6	20	98	170
	6.400	8.000	8*	25*	124*	203*
	6.500	8.100	10*	30*	150*	235*
	6.600	8.200	13*	35*	176*	268*
	6.700	8.300	15*	40*	202*	300*
	6.800	8.400	17*	46*	228*	333*
	6.900	8.500	19*	51*	253*	365*
	7.000	8.600	21*	56*	279*	398*
	7.100	8.700	23*	61*	305*	430*
	7.200	8.800	25*	66*	331*	463*
35 R	7.400	8.600	1	11	57	180
	7.500	8.700	3*	17*	84*	227*
	7.600	8.800	6*	22*	111*	274*
	7.700	8.900	8*	28*	138*	322*
	7.800	9.000	10*	33*	165*	369*

(*) Maximum installable length ONLY with class H1 flue gas discharge.

The Ø50 or Ø60 or Ø80 configurations report experimental data verified in the laboratory. In case of installations different from those indicated in the "basic configurations" and "adjustments" tables, refer to the equivalent linear lengths shown below.
ATTENTION - In any case, the maximum lengths declared in the booklet are guaranteed and it is essential not to exceed them.

Component	Linear equivalent in meters Ø80 (m)	
	Ø 50	Ø 60
45° bend	12,3	5
90° bend	19,6	8
Extension 0,5 m	6,1	2,5
Extension 1,0 m	13,5	5,5
Extension 2,0 m	29,5	12

Flue gas discharge and combustion air intake

Installation on collective flues in positive pressure

The collective flue is a flue gas discharge system suitable for collecting and expelling the combustion products of multiple appliances installed on multiple floors of a building. Positive pressure collective flues can only be used for type C condensing appliances. Consequently, the B53P/B23P configuration is prohibited. The installation of boilers on pressurized collective flues is permitted exclusively for G20.
The boiler is sized to function correctly up to a maximum internal pressure of the flue not exceeding 25 Pa. Check that the number of fan revolutions complies with what is reported in the "technical data" table. Make sure that the air intake and combustion product exhaust ducts are watertight.

	maximum length	minimum length	U.o.M.
Ø80-80	4,5+4,5	0,5	m
Ø80/125	4,5	0,5	m

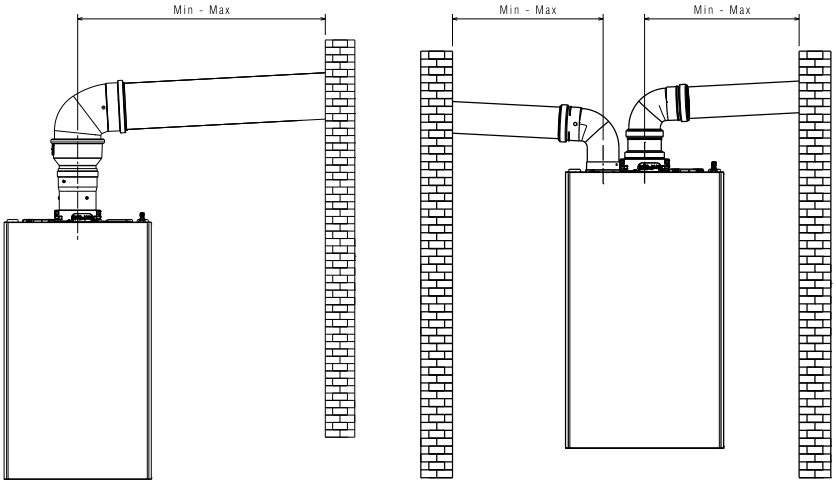

Accessories

Description	Image	QR Code
Crosspiece for built-in installation	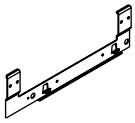	
Bottom fitting cover	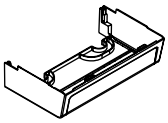	
DIN vs Beretta Replacement Ramp Kit	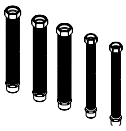	
Compact magnetic filter	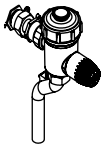	
Compact water softener		
High head circulator 7,5 m	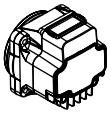	
BE09 board with double multifunction relay	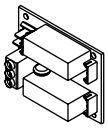	
Hi, Comfort K100 Key		
Antifreeze resistance -15°C	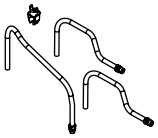	

Guide to the specifications

Description

Models C

The EXCLUSIVE EVO X C model is a wall-mounted condensing boiler to be used for heating and the production of instantaneous domestic hot water: depending on the flue accessory used, it is classified in the categories B23P; B53P; C(10); C13,C13x; C33,C33x; C43,C43x; C53,C53x; C63,C63x; C83,C83x; C93,C93x. Wall-mounted condensing boilers, with primary exchanger in larger AISI 441 stainless steel and self-adaptive combustion control system ACC (Active Combustion Control), which guarantees functionality, maximum efficiency and low emissions in all circumstances. Power modulation up to 1:13. Sound power up to 45 dB for the 30 model.
The EXCLUSIVE EVO X R model, in combination with the Hi, Comfort T100 thermostat or the advanced T300 thermostat (available as accessories), reaches system class A+.
Water heating energy efficiency class for size 35C is A, with XXL profile.
EXCLUSIVE EVO X C model can be installed indoors or outdoors in a partially protected place, i.e. in a place where the boiler is not exposed to direct action and infiltration of rain, snow or hail. The boiler can operate in a temperature range from 0 to 60°C (from -15°C to 60°C with resistance kit).
EXCLUSIVE EVO X C model stands out for its compactness, application flexibility and wide availability of accessories that guarantee compatibility in Beretta boxes.
EXCLUSIVE EVO X C model is equipped with Beretta Hybrid Ready technology, designed to integrate and manage different energy sources (gas/electricity and renewables). Thanks to the BUS communication system, the boiler is able to integrate into Beretta multi-energy systems through the T300 remote control panel (Energy Manager). Totally PLASTIC FREE packaging certified FSC with internal films in 100% compostable and biodegradable material.
They are equipped with:

- Self-adaptive combustion system ACC (Active Combustion Control). This innovative control system, developed by Beretta, guarantees, in all circumstances, functionality, efficiency and low emissions. The ACC system uses an ionization sensor immersed in the burner flame which, through its information, allows the control board to act on the gas valve that regulates the fuel. This sophisticated control system allows self-regulation of combustion, eliminating the need for initial calibration. It was designed to operate on methane, LPG and propane air; transformation from one gas to another through GAC programming alone, without the need for nozzle kits or diaphragms.
  EXCLUSIVE EVO X can also work with mixtures of natural gas and up to 20% hydrogen; it has been designed to operate in the future with 100% hydrogen combustion via a conversion kit.
- High efficiency modulating circulator already connected hydraulically and electrically, which is factory set with a 7 m head curve; available as a 7,5 m circulator accessory. Modulation occurs proportionally to the power supplied by the burner.
- Anti-locking system that starts an operating cycle every 24 hours of parking with function selector in any position.
- Circular oversized main exchanger in AISI 441 stainless steel.
- Brazed plate DHW exchanger designed and manufactured in Beretta with high efficiency that allows the production of domestic hot water in condensation mode and with maximum stability.
- Premix burner with low polluting emissions Class 6 NOx, according to UNI EN 15502-1, fan, high modulation mixer and gas diaphragm. Available as an accessory kit with non-return valve (clapet) for connection to positive pressure flue systems.
- Air filter integrated in the boiler as standard in elastic and break-resistant polyolefin fibres.
- Hydraulic connections with sequence of DIN type connections and specific accessories in case of replacement with old boilers and built-in boxes.
- Semi-automatic filling function via solenoid valve unit and non-return valve.
- Filling cock, deaeration cock.
- Siphon with safety ball inside the boiler footprint.
- Drain valve.
- Pressure transducer.
- Safety valve.
- Return probe, flue gas probe, and Flow probe.
- Automatic antifreeze system, which activates when the primary circuit water temperature drops below 5°C. This system is always active and guarantees protection of the boiler up to an air temperature in the installation site of 0°C (from -15°C to 60°C with resistor kit).
- Limit thermostat.
- Double electrode, one for ignition and the other for flame/ionization detection.
- Ignition transformer.

Guide to the specifications

- Prepared with flue gas analysis socket cap.
- 9 liter expansion vessel.
- Hydraulic three-way valve (stepper).
- Hydrometer.
- Lower air vent valve.
- Control panel with modern FULL TOUCH color machine interface function. Vertical orientation. Preparation of tutorials. Displays system-related settings and makes it possible to access parameters. The main screen shows, in the central position, the temperature of the DHW probe unless a heat request is in progress, in this case the boiler delivery temperature, the water pressure in the system, and the information relating to the current date and time, and, if available, the value of the external temperature detected.
- OT+ input as standard.
- EXCLUSIVE EVO X is compatible with all Hi, Comfort products.
- EXCLUSIVE EVO X is compatible with Smart Key.

Compliance

The EXCLUSIVE EVO X boiler complies with:
- Regulation (EU) 2016/426.
- Efficiency Directive: Article 7(2) and Annex III of 92/42/EEC.
- Electromagnetic Compatibility Directive 2014/30/EU.
- Low Voltage Directive 2014/35/EU.
- Directive 2009/125/EC Eco-design of energy-related products.
- Regulation (EU) 2017/1369 Energy Labeling.
- Delegated Regulation (EU) No. 811/2013.
- Delegated Regulation (EU) No. 813/2013.
- UNI/TS 11854 standard.

Models R

EXCLUSIVE EVO X R model is a wall-mounted condensing boiler to be used only for heating and domestic hot water production with an external boiler: depending on the flue accessory used, it is classified in the categories B23P; B53P; C(10); C13,C13x; C33,C33x; C43,C43x; C53,C53x; C63,C63x; C83,C83x; C93,C93x. Wall-mounted condensing boilers, with primary exchanger in AISI 441 stainless steel and self-adaptive combustion control system ACC (Active Combustion Control), which guarantees functionality, maximum efficiency and low emissions in all circumstances. Power modulation up to 1:13.
The EXCLUSIVE EVO X R models, in combination with the Hi, Comfort T100 thermostat or the advanced T300 thermostat (available as accessories), reach system class A+.
EXCLUSIVE EVO X R model can be installed indoors or outdoors in a partially protected place, i.e. in a place where the boiler is not exposed to direct action and infiltration of rain, snow or hail. The boiler can operate in a temperature range from 0 to 60°C (from -15°C to 60°C with resistance kit).
EXCLUSIVE EVO X R model stands out for its compactness, application flexibility and wide availability of accessories that guarantee compatibility in Beretta boxes.
EXCLUSIVE EVO X R model is equipped with Beretta Hybrid Ready technology, designed to integrate and manage different energy sources (gas/electricity and renewables). Thanks to the BUS communication system, the boiler is able to integrate into Beretta multi-energy systems through the T300 remote control panel (Energy Manager).
Totally PLASTIC FREE FSC certified packaging with internal films made of 100% compostable and biodegradable material.
They are equipped with:
- Self-adaptive combustion system ACC (Active Combustion Control). This innovative control system, developed by Beretta, guarantees, in all circumstances, functionality, efficiency and low emissions. The ACC system uses an ionization sensor immersed in the burner flame which, through its information, allows the control board to act on the gas valve that regulates the fuel. This sophisticated control system allows self-regulation of combustion, eliminating the need for initial calibration. It was designed to operate on methane, LPG and propane air; transformation from one gas to another through GAC programming alone, without the need for nozzle kits or diaphragms.
  EXCLUSIVE EVO X R model can also work with mixtures of natural gas and up to 20% hydrogen; it has been designed to operate in the future with 100% hydrogen combustion via a conversion kit.
- High efficiency modulating circulator already connected hydraulically and electrically, which is factory set with a 7 meter head curve; available as a 7,5 m circulator accessory. Modulation occurs proportionally to the power supplied by the burner.
- Anti-locking system that starts an operating cycle every 24 hours of parking with function selector in any position.
- Circular oversized main exchanger in AISI 441 stainless steel.
- Premix burner with low polluting emissions Class 6 NOx, according to UNI EN 15502-1, fan, high modulation mixer and gas diaphragm. Available as an accessory kit with non-return valve (clapet) for connection to positive pressure flue systems.
- Air filter integrated in the boiler as standard in elastic and break-resistant polyolefin fibres.

Guide to the specifications

- Hydraulic connections with sequence of DIN type connections and specific accessories in case of replacement with old boilers and built-in boxes.
- Siphon with safety ball inside the boiler footprint.
- Drain valve.
- Pressure transducer.
- Safety valve.
- Return probe, flue gas probe, and Flow probe.
- Automatic antifreeze system, which activates when the primary circuit water temperature drops below 5°C. This system is always active and guarantees protection of the boiler up to an air temperature in the installation site of 0°C (from -15°C to 60°C with resistor kit).
- Limit thermostat.
- Double electrode, one for ignition and the other for flame/ionization detection.
- Ignition transformer.
- Prepared with flue gas analysis socket cap.
- 9 liter expansion vessel.
- Hydraulic three-way valve (stepper).
- Hydrometer.
- Lower air vent valve.
- Control panel with modern FULL TOUCH color machine interface function. Vertical orientation. Preparation of tutorials. Displays system-related settings and makes it possible to access parameters. The main screen shows, in the central position, the temperature of the DHW probe unless a heat request is in progress, in this case the boiler delivery temperature, the water pressure in the system, and the information relating to the current date and time, and, if available, the value of the external temperature detected.
- OT+ input as standard.
- EXCLUSIVE EVO X is compatible with all Hi, Comfort products.
- EXCLUSIVE EVO X is compatible with Smart Key.

Compliance

The EXCLUSIVE EVO Xboiler complies with:
- Regulation (EU) 2016/426
- Efficiency Directive: Article 7(2) and Annex III of 92/42/EEC
- Electromagnetic Compatibility Directive 2014/30/EU
- Low Voltage Directive 2014/35/EU
- Directive 2009/125/EC Eco-design of energy-related products
- Regulation (EU) 2017/1369 Energy labelling
- Delegated Regulation (EU) No. 811/2013
- Delegated Regulation (EU) No. 813/2013
- UNI/TS 11854 standard

RIELLO S.p.A.
Via Ing. Pilade Riello, 7
37045 Legnago (VR) - Italy
tel. +39 0442 630111

www.berettaheating.com

SCAN AND DISCOVER
EXCLUSIVE EVO X

27022777 - EN - rev. 00 09/2024

©2024 Carrier. All rights reserved.
All product and service marks referenced herein are the property of their respective owners.

Beretta reserves the right to change the information and specifications contained in this document at any time and without notice. The content and information contained herein is intended for informational purposes only and is not intended to provide legal or professional advice. This document therefore cannot be considered binding on third parties.